Summer 2018 NASA Internship Report

Keenan Chatar

Table of Contents

1 Intern Background

I am a final year student at the University of the West Indies (UWI) reading for a MSc. in Electrical and Computer Engineering, focusing on Integrated Computer Systems. I graduated from the UWI with a BSc. (Hons) in Electrical and Computer Systems with a specialization in Computer Systems and Control Systems. During my undergraduate years, I was part of the Institute of Electrical and Electronics Engineers (IEEE) Student Branch at UWI where I participated in club activities and events. In addition, I also published a paper titled "Analysis of existing designs for FPGA-Based Ultrasound Imaging Systems" in the International Journal of Signal Processing, Image Processing and Pattern Recognition.

After completing my BSc. I worked in a professional capacity at the UWI as an Associate Professional (AP) under the supervision of Dr. Akash Pooransingh. My tasks involved Research, Design and Implementation of a simple motion capture system to aide West Indies cricketers in determining illegal bowling action and aiding them in correcting bowling form.

In addition to my professional working experience as an AP, after my contract was completed, I worked with the start-up company Clear Wall Technologies Ltd. in association with the Cocoa Research Centre (CRC) at UWI. My tasks involved Design and Implementation of a front-end user interface and back-end database system which allows traceability, data parameter capture and data analytics within the cocoa bean supply chain for the CRC.

I attended Hillview College and was awarded an Additional Scholarship in Sciences from Trinidad and Tobago for my performance in Caribbean Advanced Proficiency Exam (CAPE). I also participated in the Australian Mathematics Olympiad for which I was awarded a Certificate of High Distinction in the Senior Division Level. I also enjoy various sports and hobbies such as football, cricket, badminton, chess, astronomy/star-gazing and swimming.

2 Summary of Internship Experience

The overall experience of this internship can be summarized into this singular phrase, "one of the most amazing experiences of my life". I have said this every single time someone has asked me about my experience here and it is far from an exaggeration. This opportunity was afforded to me in association with NIHERST and I could not be more grateful.

The internship took place at the NASA Ames Research Centre (NASA ARC) located in Mountain View, California. NASA ARC is in the centre of Silicon Valley in California which is heralded as one of the technological and innovation forefronts of the world.

Figure 1: NASA Ames Research Centre

However, the NASA ARC facility had a sense of history attached to it as well. The facility was filled with historical landmarks and amazing sights to witness such as Hangar One, which housed the USS Macon, a zeppelin.

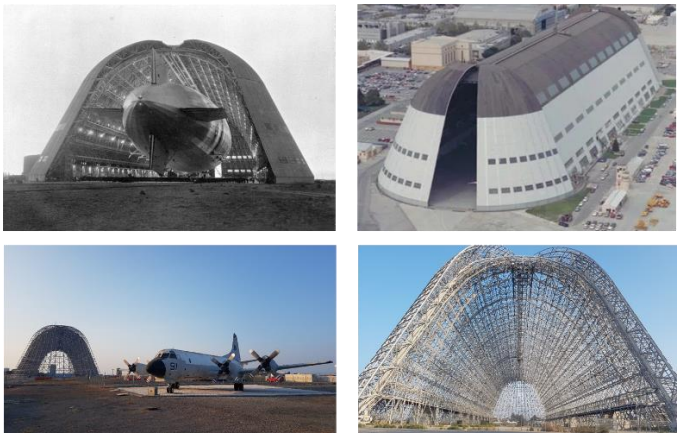

Figure 2: Hangar One

In addition to the historical features, the centre also housed many technological marvels, some of which I was able to view as the centre held several tours of the various facilities. Some of the amazing facilities included the Wind Tunnels, the Vertical Gun Range, the Supercomputer facility and the Vertical Motion Simulator. These various facilities were incredible to witness as they are amazing feats of engineering.

Figure 3: Facilities

At the internship, we were part of a group called the International Interns which were interns from all over the globe. It was an amazing experience to hear the different stories and interact with these unique cultures from Spain, Mexico, Portugal, Sweden, Switzerland, Australia and more.

Figure 4: International Interns

3 Overview of Project

During this internship, I was mentored by Dr. Meyya Meyyappan, Dr. Jin-Woo Han and Dr. Meyonglok Seoul who are highly distinguished individuals and I was truly honoured to even be within their general vicinity, let alone converse and interact with them. I worked with these individuals on a project titled "Portable Data Capture System for the Triboelectric Nanogenerator".

3.1 Introduction

Energy is present in the ambient environment and is wasted through dissipation from heat, friction and other losses. Energy Harvesting is a technique that can convert some of this unused energy into useful, stored electrical energy. This energy can then be used in applications including sensors, micro/nano-systems, medical equipment, personal electronics and defence technology.

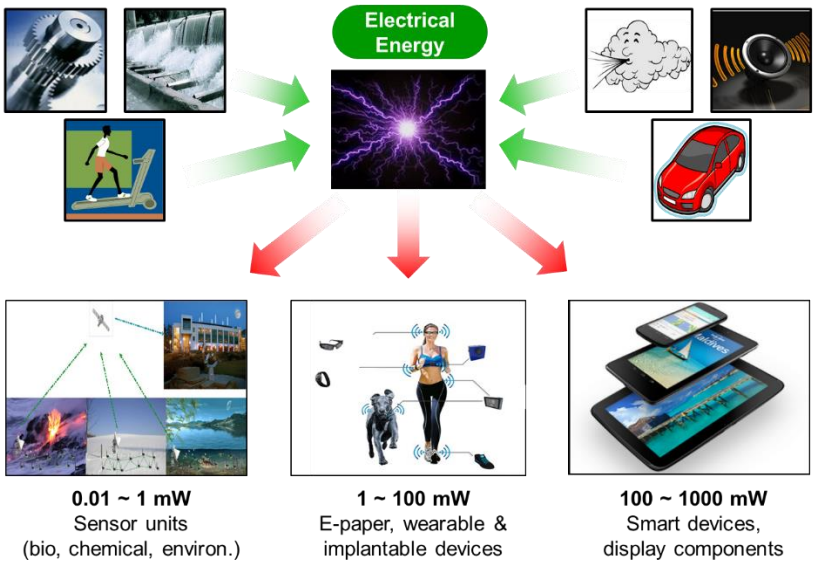

Figure 5: Energy Harvesting

3.2 Project Objectives

The Triboelectric Nanogenerator (TENG) is a device capable of harnessing wasted energy by means of the triboelectric effect. However, the TENG requires specialized, desktop-sized measurement and data logging equipment to accurately measure and display the power and charge characteristics of the generator on a desktop PC. This equipment requires AC power outlets and are also unwieldy, thus making experimentation and data capture of the generator in varying environmental scenarios infeasible.

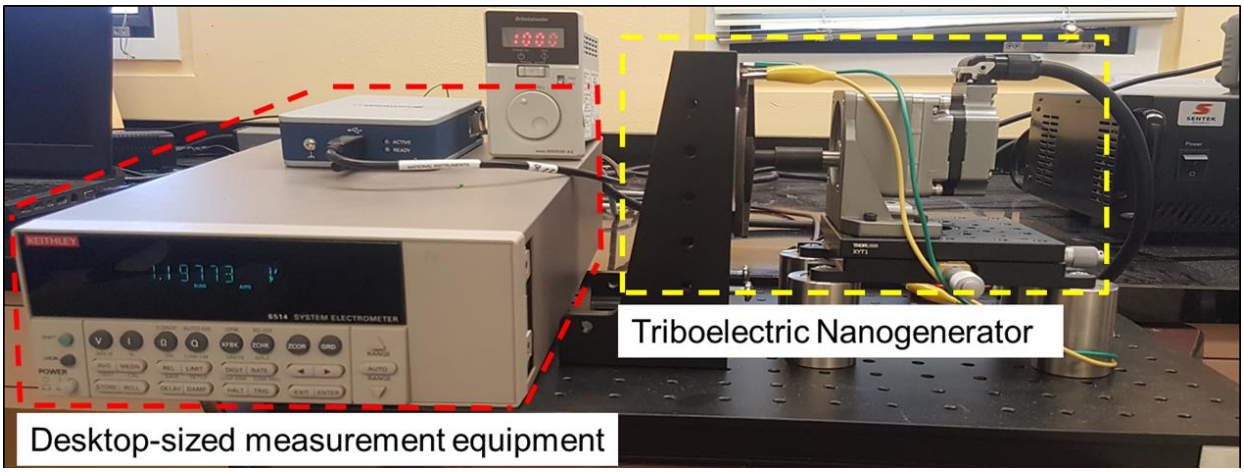

Figure 6: Project problem

The purpose of this project is to develop a miniaturized, standalone/battery operated data measurement and capture system that can measure the power characteristics of the TENG.

1) Design and Implement a conditioning circuit
2) Design and Implement a stand-alone, portable data acquisition and storage system
3) Test the prototype system in a full-scale outdoor experiment

3.3 Design and Methodology

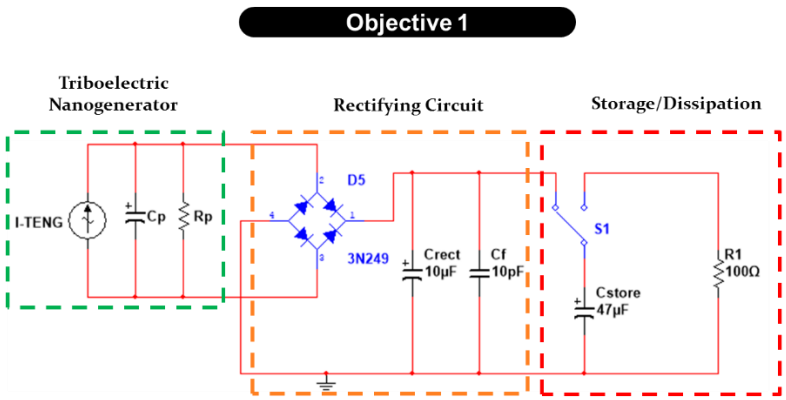

Figure 7: Circuit diagram

1) Model TENG characteristics
2) Convert AC output of TENG to DC output using full wave bridge rectifier design
3) Charge the storage capacitor using DC output voltage from the rectifier.

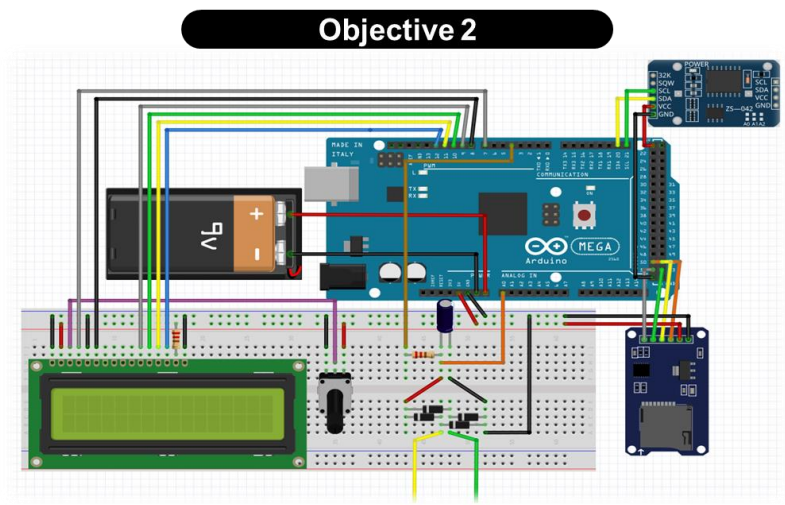

Figure 8: Design layout

4) Take measurement data about the charge and discharge of the storage capacitor using an Arduino.
5) Store measurement data and date/time information to the SD card.
6) Display measurement readings on LCD.

7) Discharge storage capacitor and repeat the previous steps for another cycle.

3.4 Results

A system prototype was developed on a breadboard circuit and the figure below illustrates the different sections of the system. The system prototype consists of three main parts:

1) The Triboelectric Nanogenerator.
2) The Measurement and Display System.
3) The Rectifier Circuit and Power Supply.

The rotation of the TENG is manually controlled by a motor. A 9V DC battery supply powers an Arduino Mega 2560 microcontroller which in turn controls a microSD card adapter, a DS3231 Real Time Clock and a 16x2 LCD. Readings are taken from the Rectifier Circuit which comprises of discrete electrical components such as capacitors, resistors, and rectifier diodes.

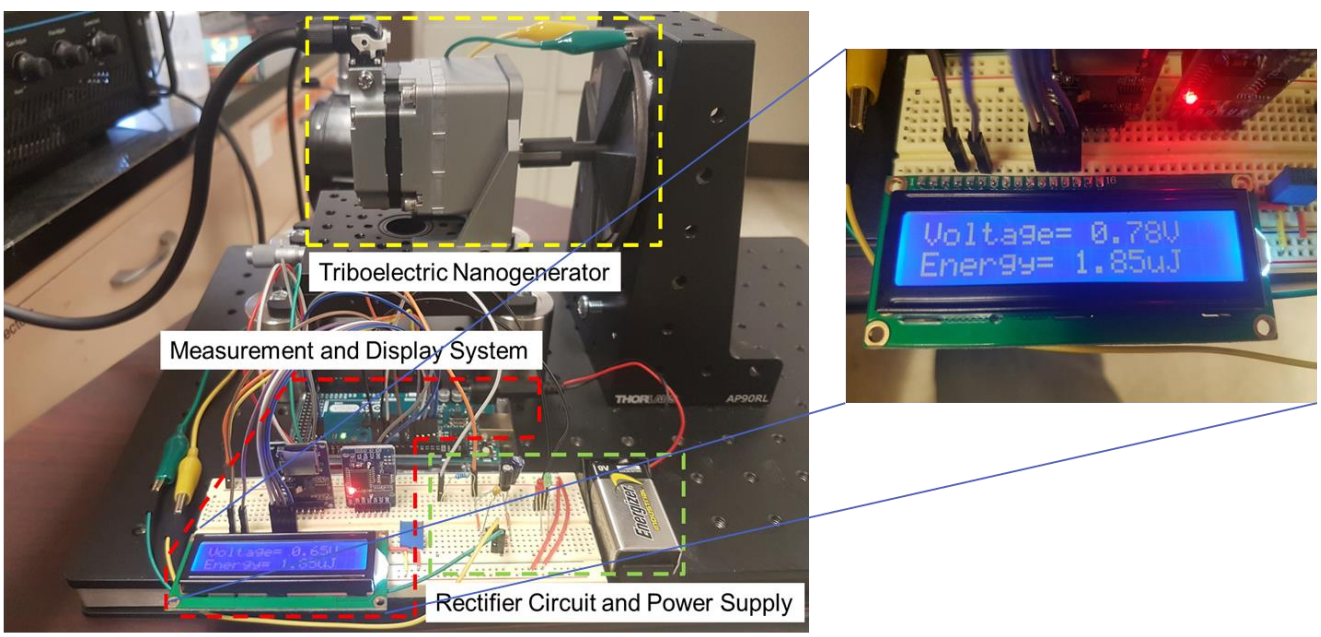

Figure 9: System Prototype

Measurement readings from the TENG are stored into the SD card in a text file format with comma delimiters, allowing simple data extraction. The data can then be analysed to better understand the characteristics of the TENG under varying environmental conditions. Furthermore, the viability of the TENG as an energy harvester can be verified by practical experiment.

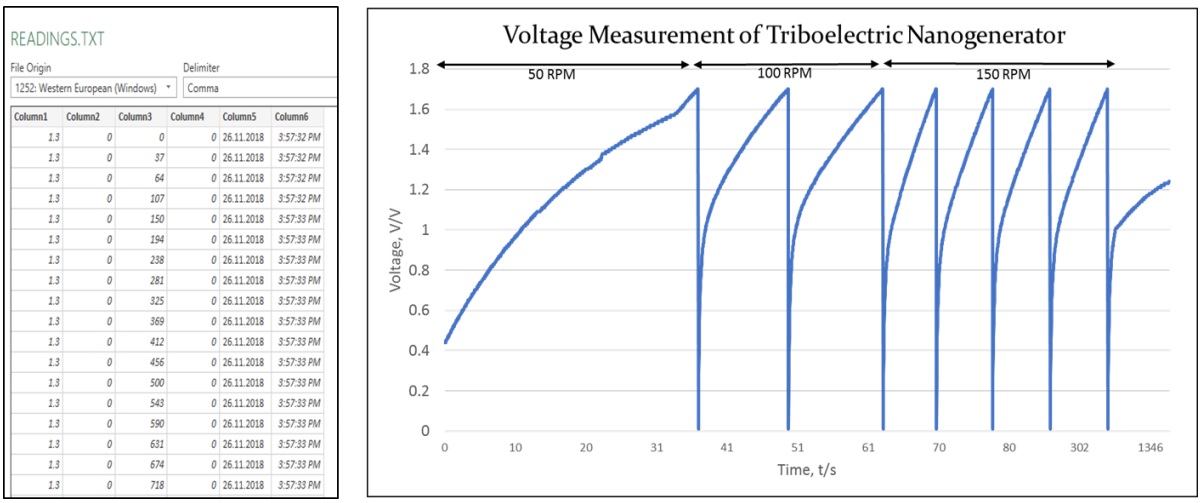

READINGS.TXT

File Origin: 1252: Western European (Windows) | Delimiter: Comma

Column1	Column2	Column3	Column4	Column5	Column6
1.3	0	0	0	26.11.2018	3:57:32 PM
1.3	0	37	0	26.11.2018	3:57:32 PM
1.3	0	64	0	26.11.2018	3:57:32 PM
1.3	0	107	0	26.11.2018	3:57:32 PM
1.3	0	150	0	26.11.2018	3:57:33 PM
1.3	0	194	0	26.11.2018	3:57:33 PM
1.3	0	238	0	26.11.2018	3:57:33 PM
1.3	0	281	0	26.11.2018	3:57:33 PM
1.3	0	325	0	26.11.2018	3:57:33 PM
1.3	0	369	0	26.11.2018	3:57:33 PM
1.3	0	412	0	26.11.2018	3:57:33 PM
1.3	0	456	0	26.11.2018	3:57:33 PM
1.3	0	500	0	26.11.2018	3:57:33 PM
1.3	0	543	0	26.11.2018	3:57:33 PM
1.3	0	590	0	26.11.2018	3:57:33 PM
1.3	0	631	0	26.11.2018	3:57:33 PM
1.3	0	674	0	26.11.2018	3:57:33 PM
1.3	0	718	0	26.11.2018	3:57:33 PM

Figure 10: Graph results

A final prototype was developed that was miniaturized and is currently being used for experiments at NASA.

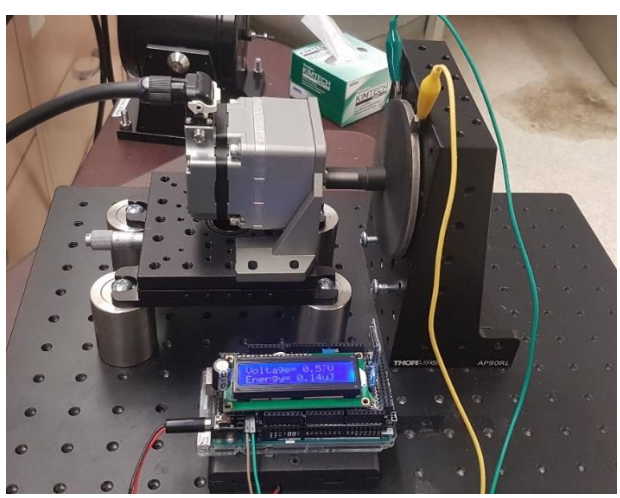

Figure 11: Final Results

3.5 Conclusion

In conclusion, a working prototype of the system has been designed and implemented. The portable stand-alone system is capable of measuring and recording the voltage produced by the Triboelectric Nanogenerator to a storage capacitor. For future work, the system will be designed and implemented onto a Printed Circuit Board (PCB) design and enclosed in a 3D printed plastic enclosure to ensure viability for outdoor use. In addition, plans are being made in the design to charge the supply battery from the TENG output itself making the system fully self-sustainable.

4 Lessons Learned

- Interacting with experienced individuals which may seem daunting at first but slowly realise they are people as well just filled with useful information to share that can be professionally beneficial or simply life pro tips.
- Developed an interest in the field of Nanotechnology and the capabilities of the technology. There are a variety of potential uses for these devices and thus it was an interesting experience to be a part of the developmental stages of the field. There is no doubt that the technology will be used widely in the field and thus learning about it at an early stage was very useful
- Social skills are necessary in life and interacting with persons from around the globe with similar interests as your own is an exciting experience. The being able to share your culture with others and they listen avidly is a wonderful feeling while also being able to learn about their culture as well.

- I also learned that no goal is unattainable, and every dream should be sought after. Every opportunity should be grasped at and should not be rejected because you think you aren't "good enough". You might just surprise yourself just how good you really are.

5 Future Work

The work I conducted at NASA has potential viability in Trinidad and Tobago. The Triboelectric Nanogenerator is an energy harvesting device and can be optimized to suit any location or requirement. This versatile nature makes it suitable for many applications in T&T such as wind energy harvesters or mechanical energy harvesters.

I am hoping to build a Wind-Energy Harvester prototype in collaboration with UWI and NASA which will utilize the data collection device I built and conduct outdoor experiments with this device. The data recorded and the application and be published in established journals. This field of science is not yet researched in the Caribbean thus this is an opportunity to introduce the technology and potentially spread the information I have learned among the scientific community of T&T.